UNIT	DATE	DESCRIPTION
25.4[1.000]	30/12/25	MODIFY DRAWING FORMAT

NOTE:

1. IMPEDANCE: 50 Ohms;
2. METAL COMPONENTS: NO BURRS, SCRATCHES, OR PLATING PEELING ON SURFACE;

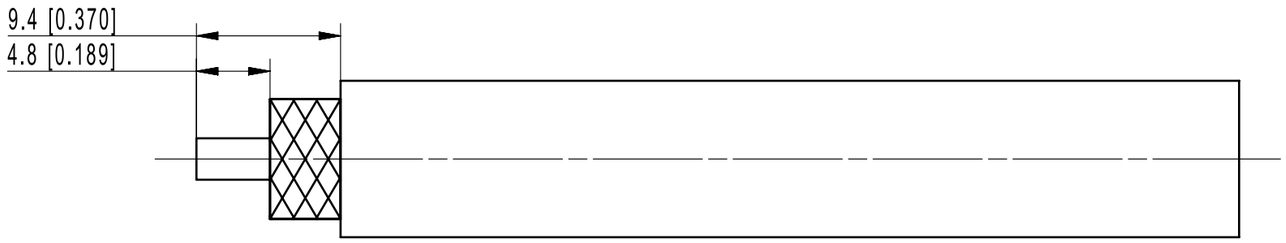

STRIPPING DIMENSIONS

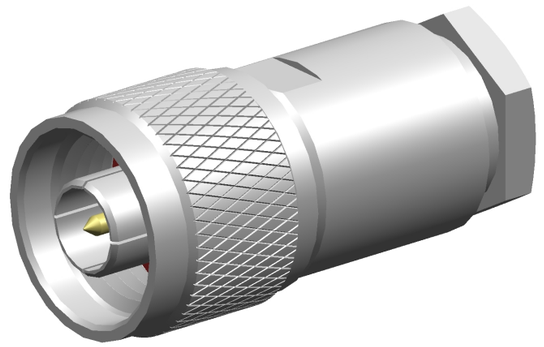

SCALE 2:1

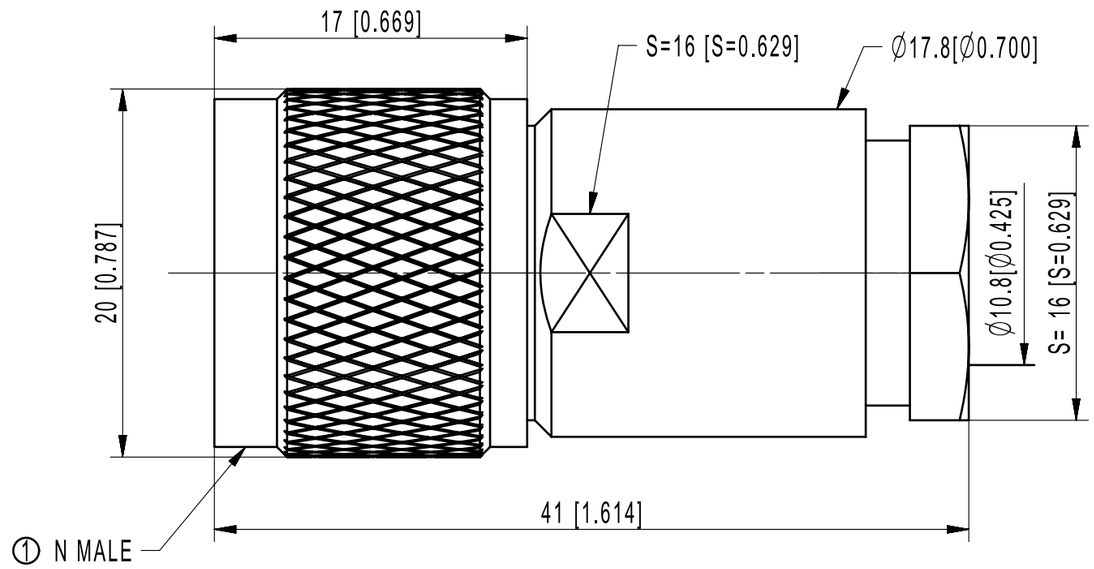

SCALE 3:1

					THIRD-ANGLE PROJECTION	DATE 30/12/25	superbat
					APPROVED BY	CHECKED BY	DESIGNED BY
					ZZP 30/12/25	DZ 30/12/25	LB 30/12/25
4	COUPLING NUT	BRASS	NICKEL PLATE	1			N01-SPL40-41BS01
3	INSULATION	PTFE	NONE	1	UNITS: mm[IN]	SCALE: N/A	REVISION: A
2	CONTACT	BRASS	GOLD PLATE	1	TOLERANCE	Tel:86-0755-25614980 Email:info@rfsupplier.com Website:www.rfsupplier.com	FOR REFERENCE ONLY
1	N MALE	BRASS	NICKEL PLATE	1	X.X ±0.10 X.XX ±0.05 X° ±0.1°		SUBJECT TO THE ACTUAL PRODUCT
	DESCRIPTION	MATERIAL	FINISH				